REV	DATE	DESCRIPTION
B	12/02	REDRAWN ON CAD
C	03/03	ADJUSTED TOLERANCES

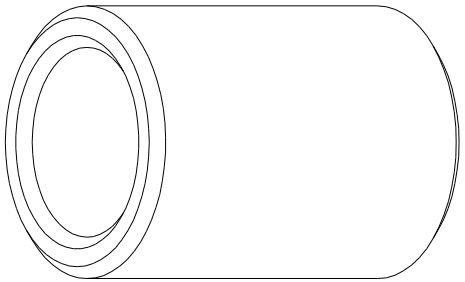

ISOMETRIC VIEW
SCALE 1:1

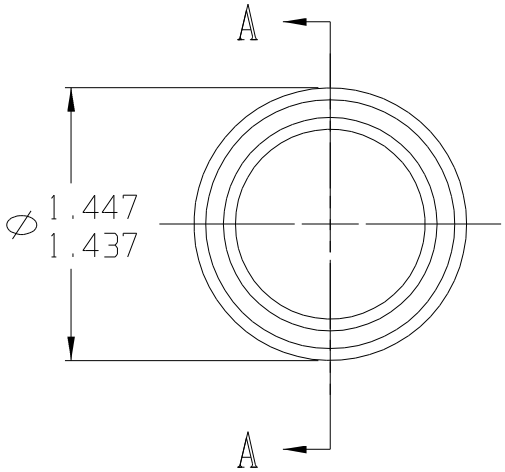

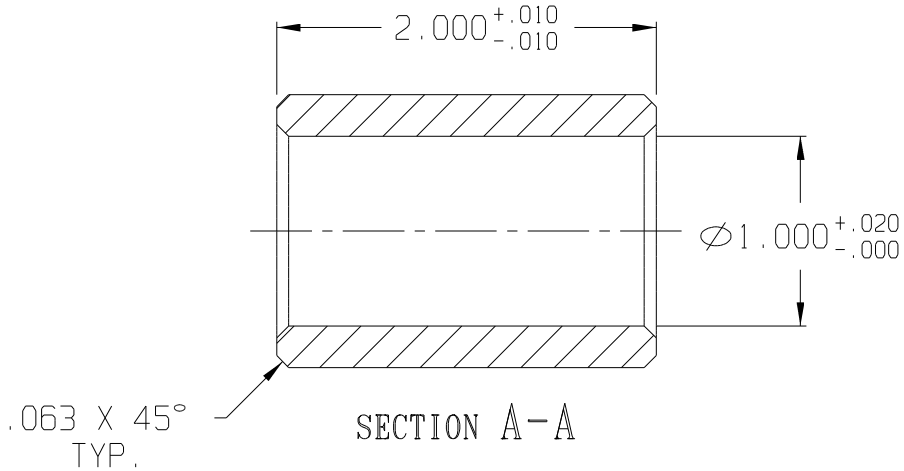

SECTION A-A

F:CADKEY/AUCILLA BEARING/PART PRINTS/API 0142_C

THIS DOCUMENT CONTAINS PROPRIETARY DESIGNS, SPECIFICATIONS, DATA, INFORMATION AND TECHNICAL MATERIAL THAT ARE THE SOLE PROPERTY OF AUCILLA, INC. THIS INFORMATION IS TO BE HELD AND TREATED BY ITS RECIPIENT ON A CONFIDENTIAL BASIS, AND IS NOT TO BE SHOWN OR DISCLOSED TO THIRD PARTIES WITHOUT THE WRITTEN CONSENT OF AUCILLA INC. THIS DATA DOES NOT CONVEY MANUFACTURING RIGHTS TO ANY ITEM SHOWN.

STANDARD TOLERANCES APPLY UNLESS OTHERWISE NOTED

LINEAR INCH		ANGULAR	
4 PLACE	± -----	4 PLACE	\ ------
3 PLACE	± .010	3 PLACE	\ ------
2 PLACE	± -----	2 PLACE	\ ------
1 PLACE	± ----	1 PLACE	\ ------
WHOLE	± ------	WHOLE	\ ------

AUCILLA BEARING

DESCRIPTION: STRAIGHT BEARING

PART NO.	API NO.	SCALE:	REV.
LS-147	0142	1:1	C
MATERIAL: Delrin 500 Bk	DRAWN BY: Dittrich	DATE: Dec. 2002	